LAB RESEARCH PRODUCTS

CUTSHEET

Interior
LRP-HC-49C-TS

Front View

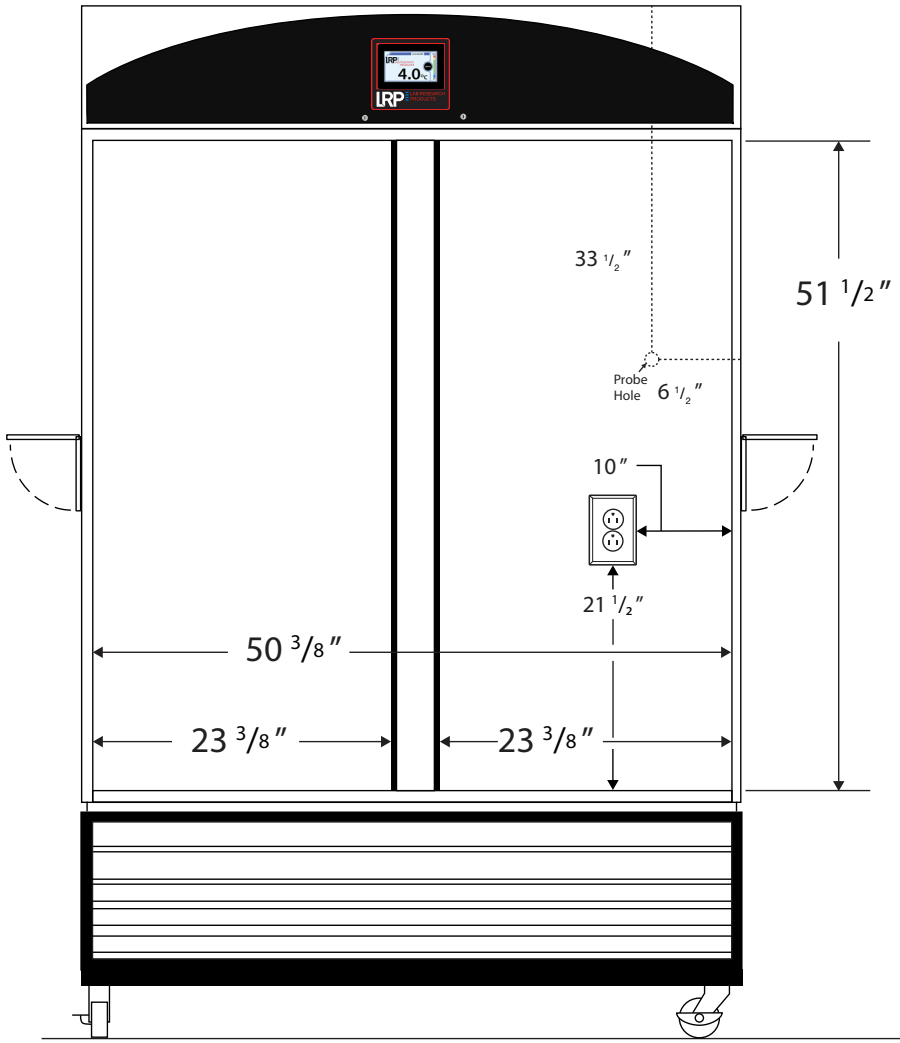

Side View

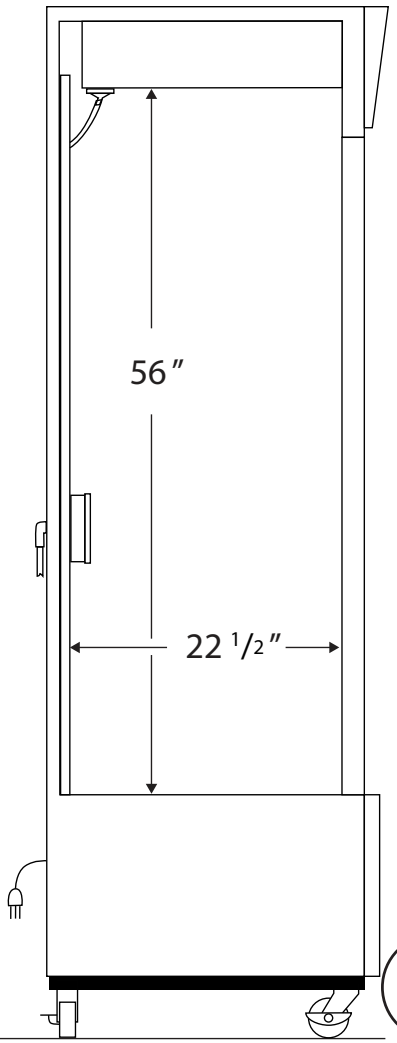

115VAC/60Hz/1PH
NEMA-5-15P

Cu. Ft	Defrost	Door	Int Door	Shelves	W″	D″	H″	Refrigerant	H.P.	Amps	Weight
49	Cycle	2 Glass	0	8 Adj	50 ⅜	22 ½	56	R290	½	8.5	445 lbs.

Note: Interior dimensions are estimates and subject to change without notice