06222021

LRP LAB RESEARCH PRODUCTS

CUTSHEET

Interior
LRP-HC-MFP-20

Front View

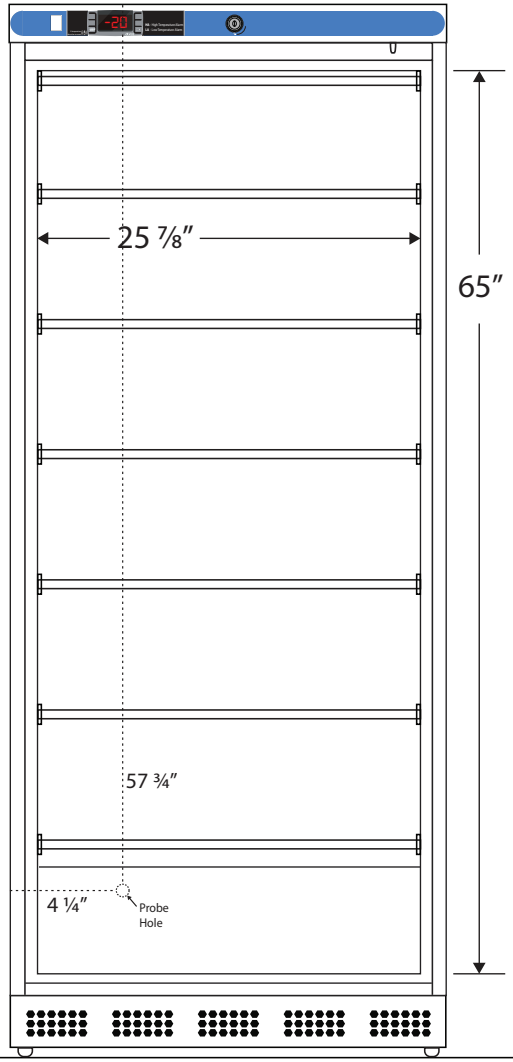

Side View

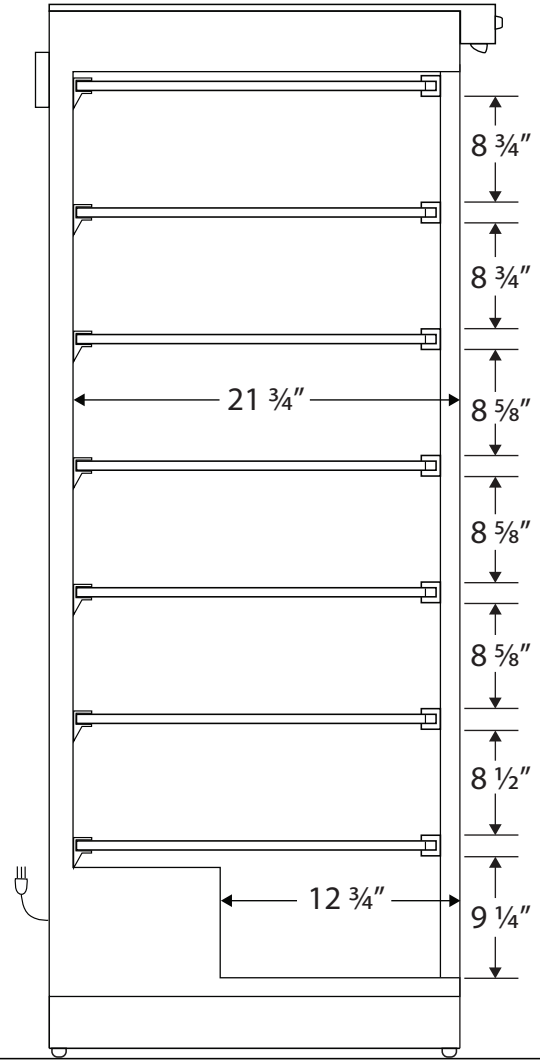

115VAC/60Hz/1PH
NEMA-5-15P

Cu. Ft	Defrost	Door	Int Door	Shelves	Interior Dim.			Refrigerant	H.P.	Amps	Weight
					W″	D″	H″				
20	Manual	1 Solid	0	6 Fixed	25 ⅞	21 ¾	65	R290	½	6	210 lbs.

Note: Interior dimensions are estimates and subject to change without notice